SSHC, INC.

ENERJOY RADIANT PEOPLEHEATER®

# TSSHC-R-30A-120V

**MAXIMUM COMFORT AND CONTROL IN HEATING**

## TSSHC-R-30A-120V

**Enclosed Relay 30 Amp DPST-N/O with 120 Vac Coil**

## 30 Amp Power Control Relay

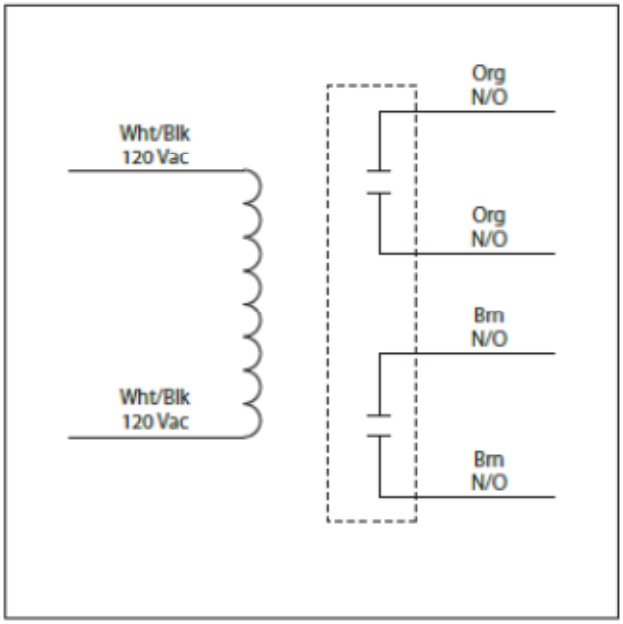

c UL us LISTED

RoHS

Made in USA
Meets
"Buy American"
of ARRA 2009

## Specifications

| | |
|---|---|
| **# Relays & Contact Type:** | One (1) DPST Continuous Duty Coil |
| **Expected Relay Life:** | 10 million cycles minimum mechanical |
| **Operating Temperature:** | -30 to 140° F |
| **Humidity Range:** | 5 to 95% (noncondensing) |
| **Operate Time:** | 18mS |
| **Relay Status:** | LED On = Activated |
| **Dimensions:** | 4.00″ x 4.00″ x 1.80″ with .50″ NPT Nipple |
| **Wires:** | 16″, 600V Rated |
| **Approvals:** | UL Listed, UL916, UL864, C-UL<br>California State Fire Marshal, CE, RoHS |
| **Housing Rating:** | UL Accepted for Use in Plenum, NEMA 1 |
| **Gold Flash:** | Yes |
| **Override Switch:** | No |

**Contact Ratings:**

30 Amp Resistive @ 300 Vac
25 Amp Resistive @ 28 Vdc
20 Amp Ballast @ 277-480 Vac
*Not rated for Electronic Ballast*
15 Amp Resistive @ 600 Vac
770 VA Pilot Duty @ 120 Vac
1158 VA Pilot Duty @ 240 Vac
1110 VA Pilot Duty @ 277 Vac
1640 VA Pilot Duty @ 480 Vac
Heavy Pilot Duty @ 600 Vac
3 HP @ 480-600 Vac
2 HP @ 240-277 Vac
1 HP @ 120 Vac

**Coil Current:**

105 mA @ 120 Vac

**Coil Voltage Input:**

120 Vac ; 50-60 Hz
Drop Out = 60 Vac
Pull In = 160 Vac

**Notes:**

- Order Both Poles Normally Closed by adding "-NC" to end of model number
- Order Pole 1 Normally Open and Pole 2 Normally Closed by adding "-NONC" to end of model number

SSHC, Inc., PO Box 769, Old Saybrook, CT 06475 (800)544-5182 (860)399-5434 (860)399-6460(fax)